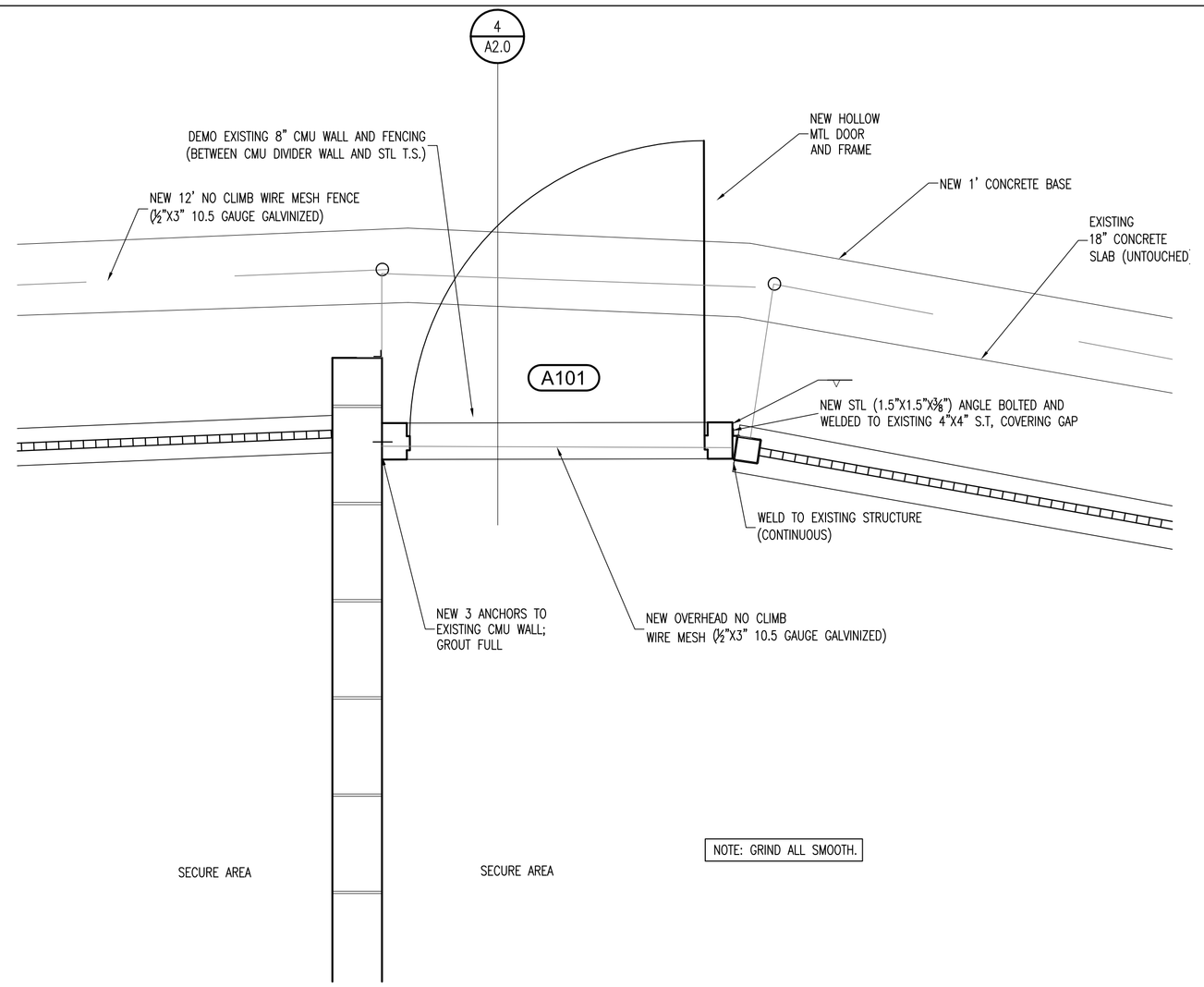

1 A2.0 DETAIL PLAN OF SECURITY DOOR
3/4"=1'0"

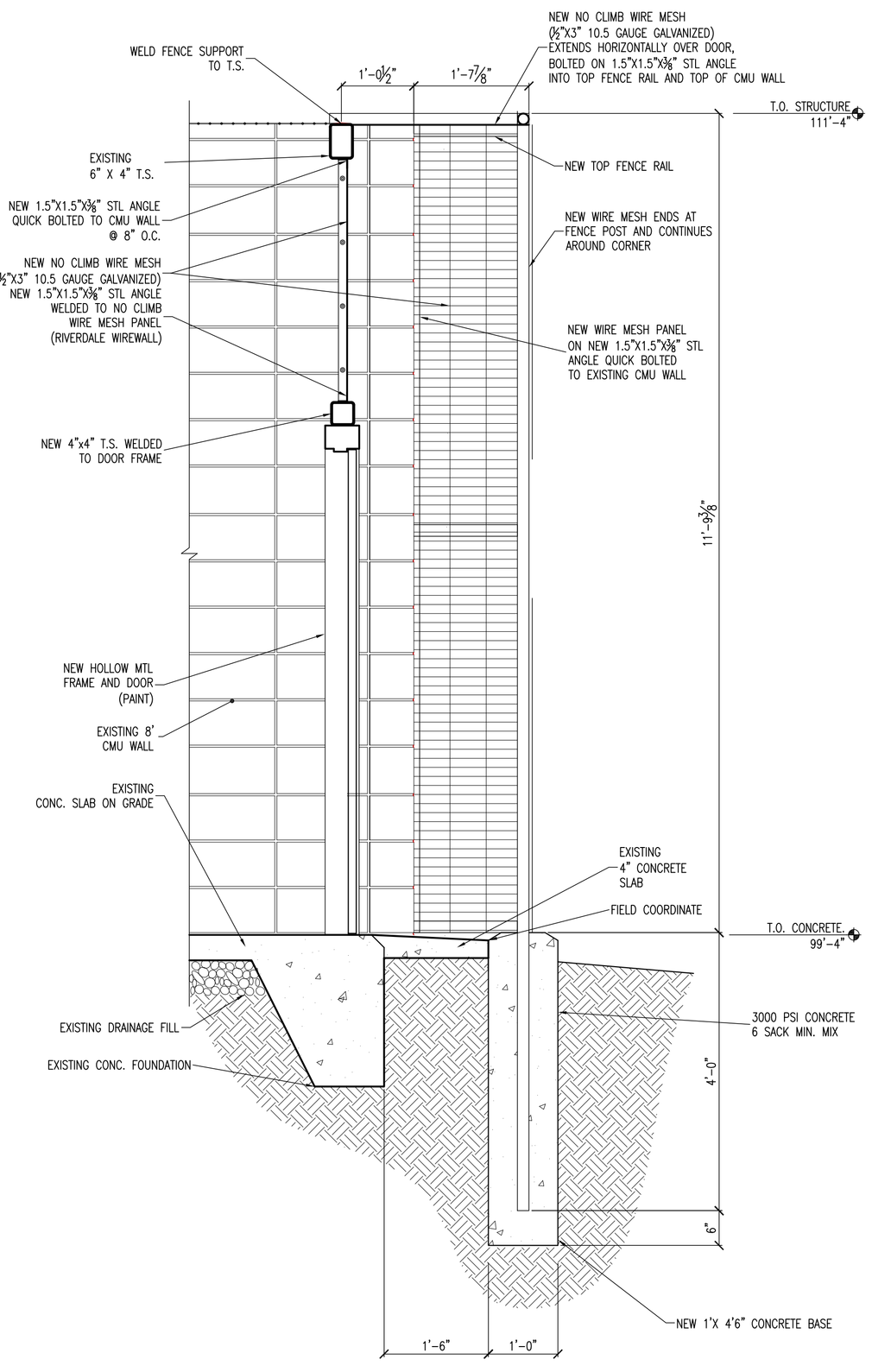

4 A2.0 DETAIL OF SECURITY AREA DOOR
3/4"=1'-0"

CONSTRUCTION NOTES:

1. SEE TECHNICAL SPECIFICATIONS FOR MATERIAL, TYPES.
2. CONCRETE GATE POST ENCASEMENTS SHALL MEET MANUFACTURER'S REQUIREMENTS.
3. ALL AREAS DISTURBED BY CONSTRUCTION ACTIVITY SHALL BE TOPSOILED, SEEDED, FERTILIZED & MULCHED PRIOR TO COMPLETION OF PROJECT.
4. ALL WORK WILL CONFORM TO MPWSS, 5TH EDITION AND CITY/STATE SPECIFICATIONS.
5. CONTRACTOR SHALL BE RESPONSIBLE FOR ALL PERMITS REQUIRED FOR THEIR CONSTRUCTION ACTIVITIES.
6. ALL CONCRETE SHALL CONSIST OF 602 LBS. CEMENT PER CUBIC YARD PER CONCRETE & 3/4" AGGREGATE WITH A SLUMP OF 5" MAXIMUM.
7. ALL COMPLETED FENCES SHALL EACH TOTAL 12' IN HEIGHT.
8. A HIGH-SECURITY LATCH ASSEMBLY LOCKING DEVICE IS REQUIRED FOR ALL GATE INSTALLATIONS.
9. THE DEPTH OF THE CONCRETE WILL BE AT LEAST 4'6" WITH A MINIMUM POST EMBEDMENT OF 4'0".
10. ABSOLUTELY NO GAPS WILL BE PERMITTED INCLUDING BUT NOT LIMITED TO: THE TERMINATION AT BUILDING FACES, BETWEEN BOTTOM OF FENCE & GROUND, TERMINATION AT GATES, AND ANY OTHER CONNECTIONS (UNLESS CLEARED WITH MSH).
11. ALL FENCE CONNECTIONS SHALL BE WELDED ACCORDING TO MANUF. RECOMM.
12. THERE SHALL BE A 4" OVERLAP BETWEEN UPPER AND LOWER FENCE PANELS AND A 2" OVERLAP BETWEEN UPPER FENCE PANELS.

DOOR AND FRAME TYPE SCALE: ¼" = 1'-0"

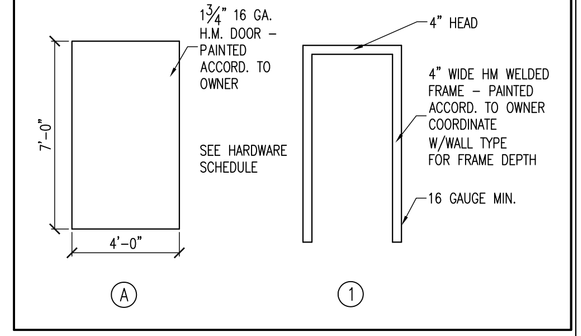

DOOR SCHEDULE:

DOOR	SIZE	RATING	DOOR	FRAME	DETAILS HEAD	JAMB	SILL
A101	3'-0"x7'-0"	–	A	1	–	–	–

HARDWARE SCHEDULE:

NO.	ITEM	DIM.	NO. USED
BB1279	HINGES (STEEL)-SH US26D	4.5"X4.5"	4
8217 X OSL	MORTISE LOCK-US26D		1
281-P10	CLOSER-EN		1
1006 x KM OPTION	ELECTRIC STRIKE (FUTURE)		1
1000-110	REPLACEMENT STRIKE PLATE		1

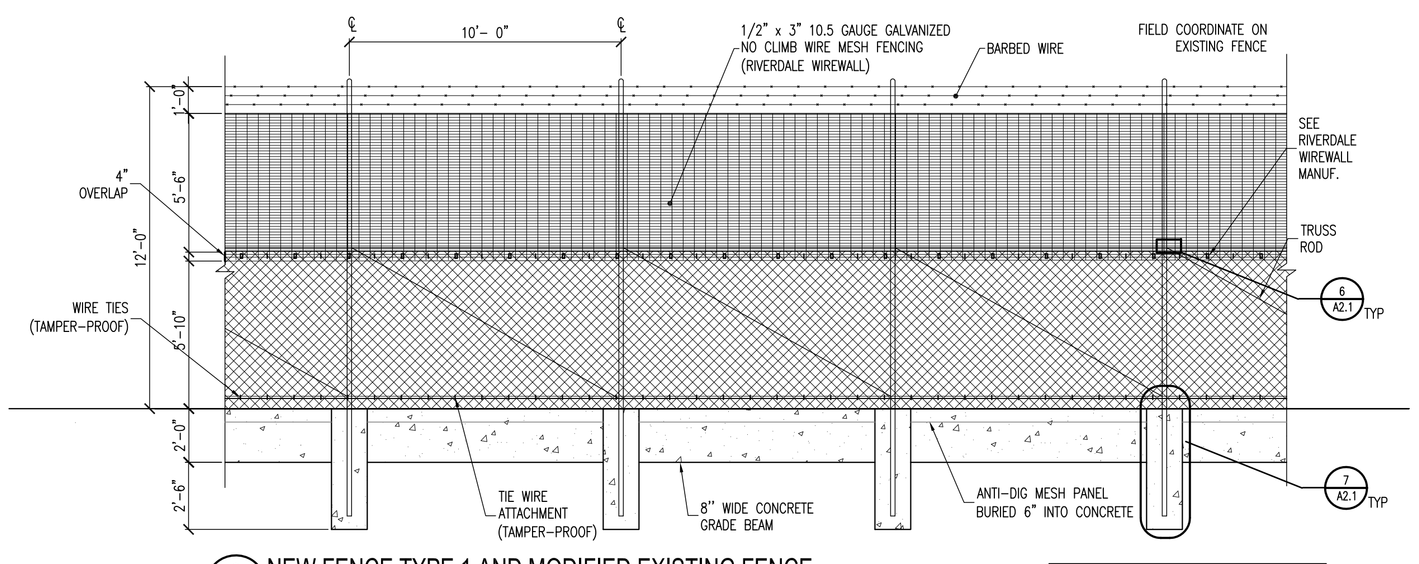

2 A2.0 NEW FENCE TYPE 1 AND MODIFIED EXISTING FENCE
1/4"=1'0"

NOTE: ALL SUPPORTS AND STRUCTURE TO BE LOCATED ON EXTERIOR OF FENCING.

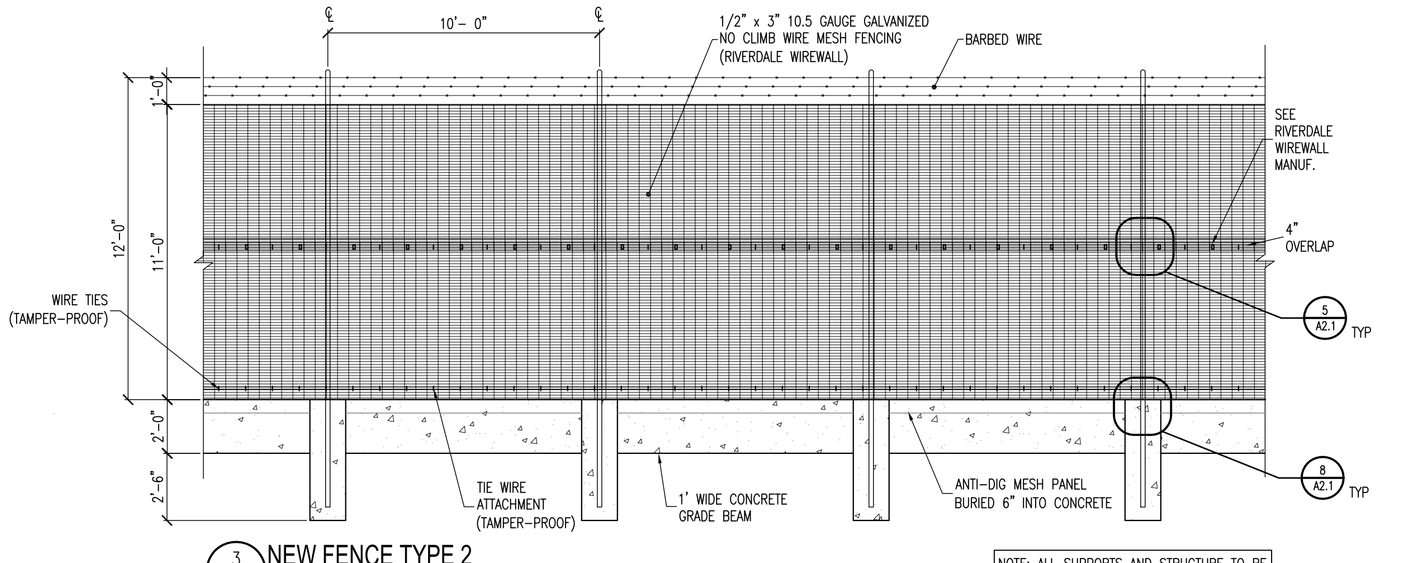

3 A2.0 NEW FENCE TYPE 2
1/4"=1'0"

NOTE: ALL SUPPORTS AND STRUCTURE TO BE LOCATED ON EXTERIOR OF FENCING.

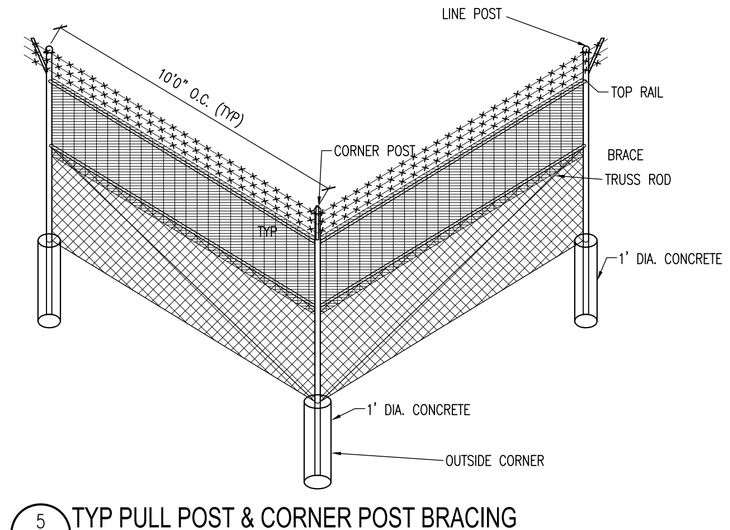

5 A2.0 TYP PULL POST & CORNER POST BRACING
NTS

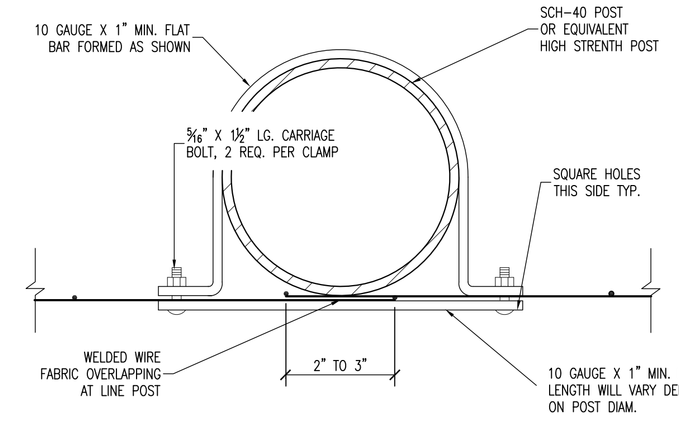

6 A2.0 POST CONNECTION DETAIL
NTS

SCHLENKER & MCKITTRICK ARCHITECTS, P.C.
50 SOUTH LAST CHANCE GULCH
HELENA, MT 59601
PHONE: (406)442-4933
FAX: (406)442-4936
WEB: WWW.ARCHITECTS-SMA.COM

ARCHITECT SEAL:

STATE OF MONTANA — JOHN D. MCKITTRICK 1005 — R. ROCKLAND SCHLENKER 1127 — HELENA, MONTANA — LICENSED ARCHITECTS

PROJECT:
MSH FORENSIC UNIT ADDITIONAL FENCING

PROJECT NUMBER:
0806

PROJECT LOCATION:
WARM SPRINGS, MT

PREPARED FOR:
MONTANA STATE HOSPITAL

LOGO:

CONSULTANT:

KEYMAP:

REVISIONS:

TEAM:
DRAWN BY: RP
CHECKED BY: JMD

TITLE:
FENCING

SHEET CONTENTS:
ELEVATIONS, DETAIL PLAN AND SECTION

CADD FILE:
S:\0806\0806\Drawings\Elevations.dwg

PHASE:
CONSTRUCTION DOCUMENTS

DATE:
6/18/2008

PROJECT NUMBER:
0806

SHEET NO.:
A2.0

copyright 2007 SMA P.C.

Plot Date: June 18, 2008