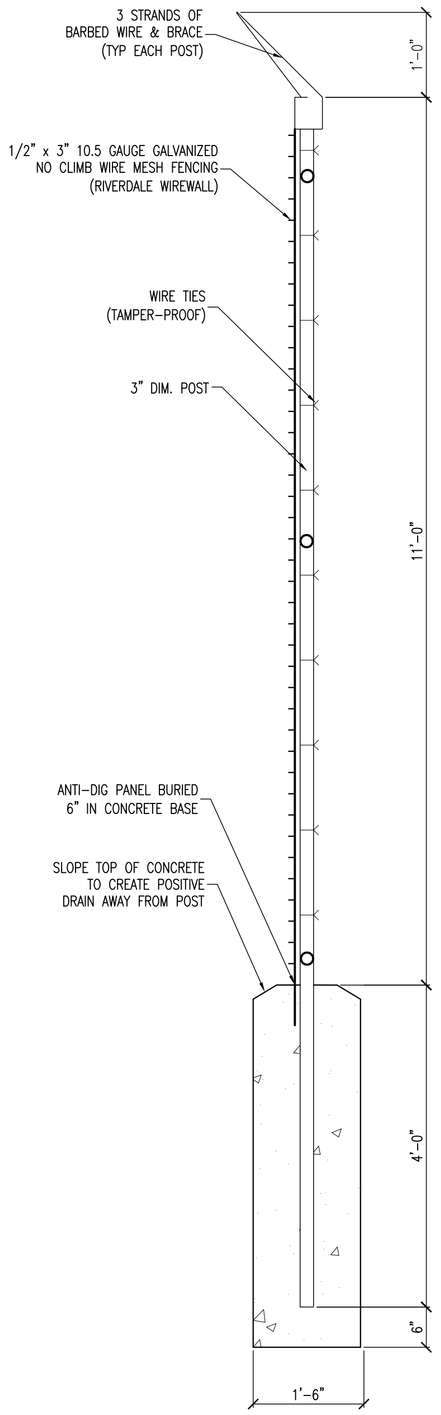

1 A2.1 TYP NEW FENCE - TYPE 2

3/4"=1'-0"

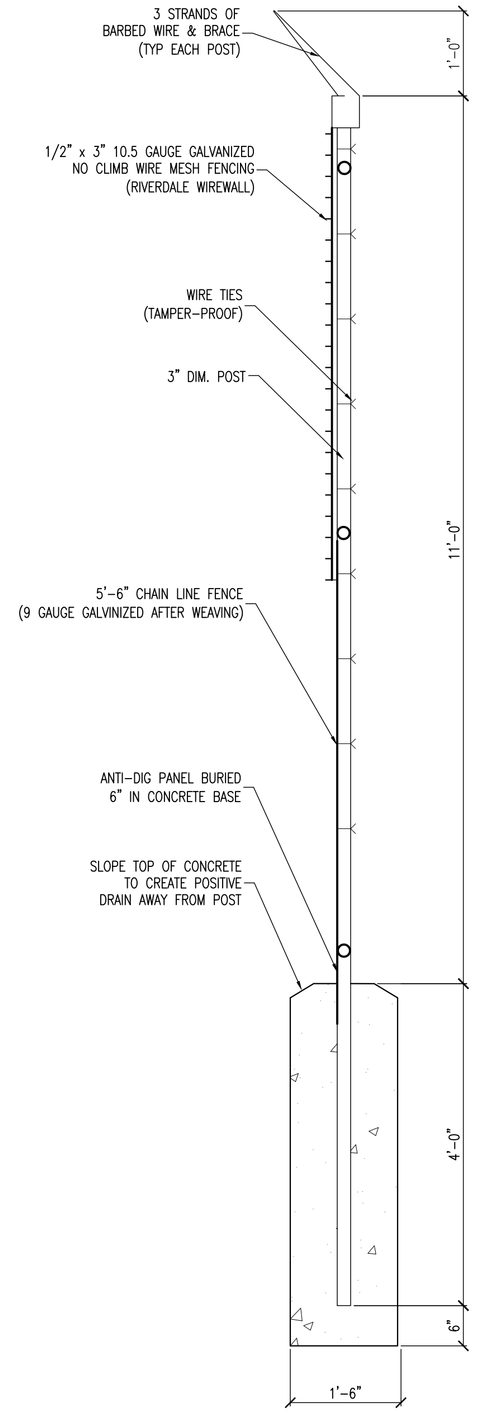

2 A2.1 TYP NEW FENCE - TYPE 1

3/4"=1'-0"

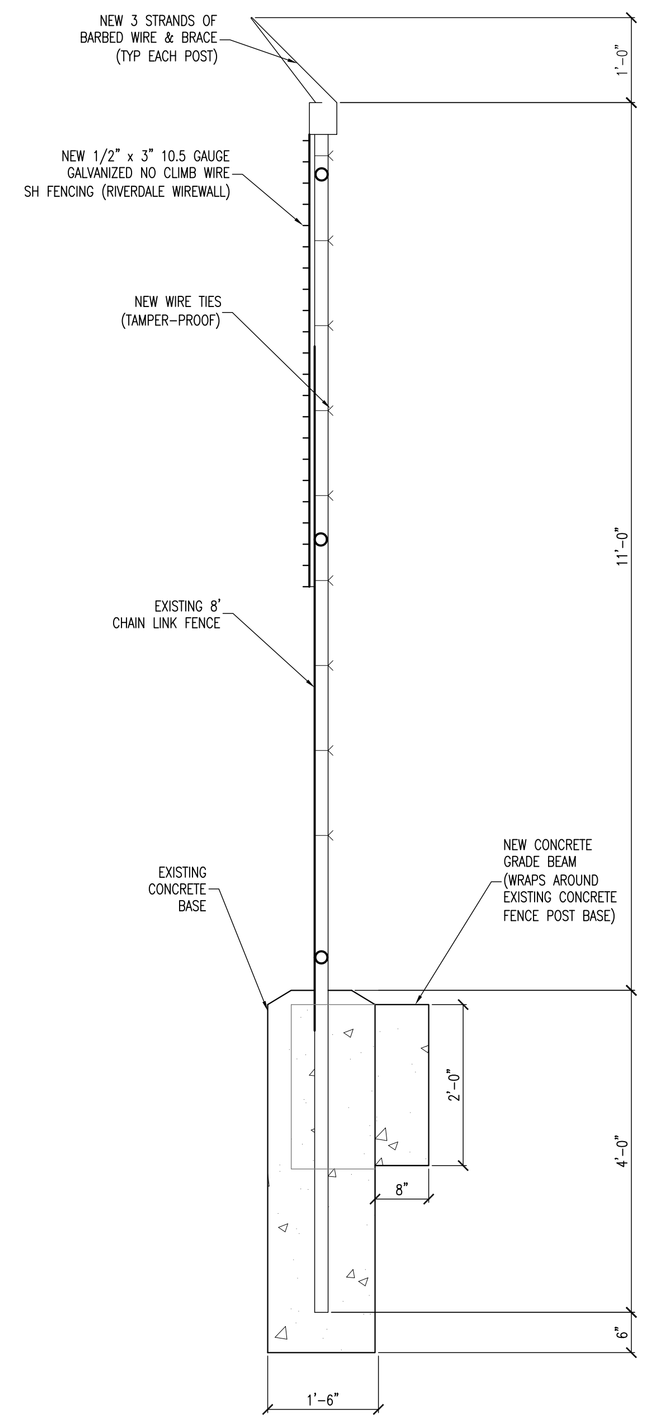

3 A2.1 TYP MODIFIED EXISTING FENCE - TYPE 3

3/4"=1'-0"

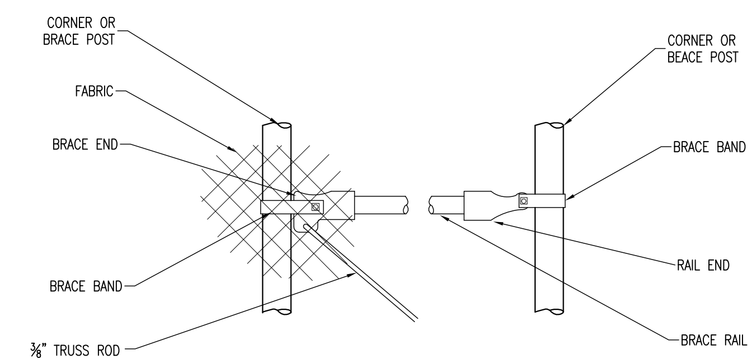

6 A2.1 BRACE RAIL FOR MODIFIED/COMBO FENCE

NTS

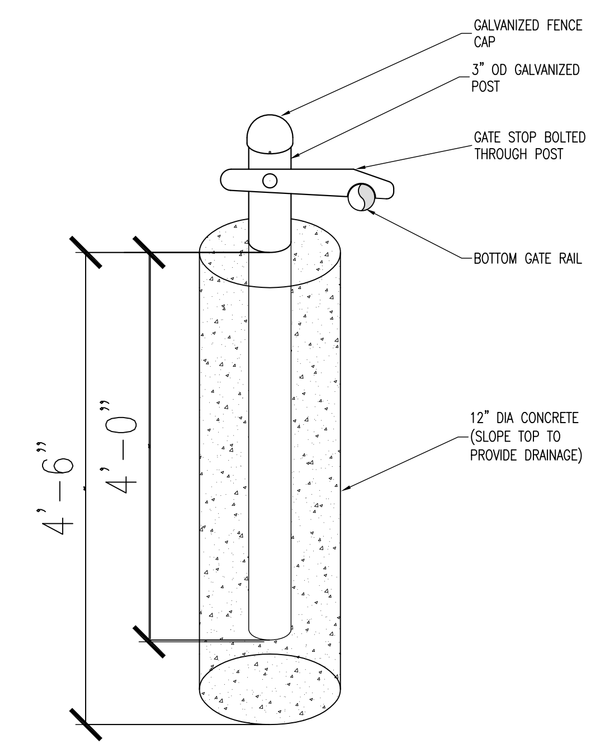

7 A2.1 BASE DETAIL FOR MODIFED/COMBO FENCE

NTS

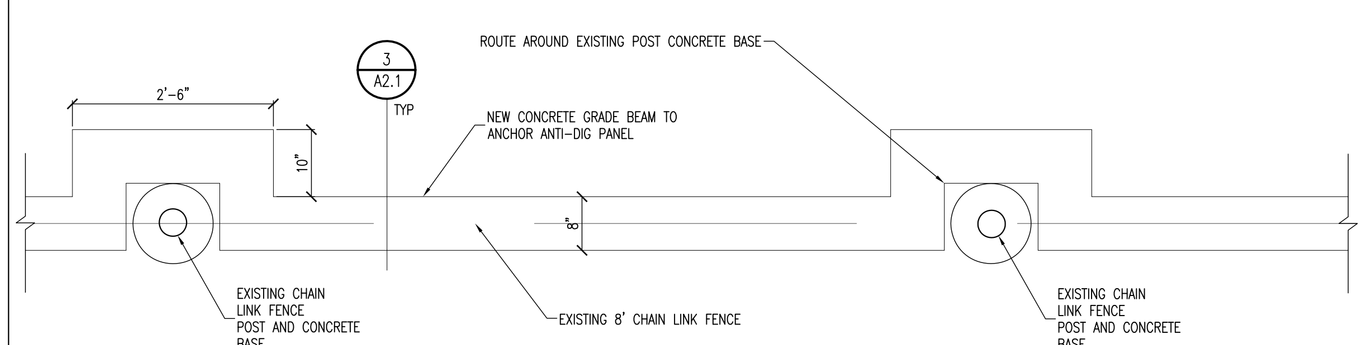

4 A2.1 DETAIL PLAN OF EXISTING CHAIN LINK FENCE MODIFICATION

3/4"=1'0"

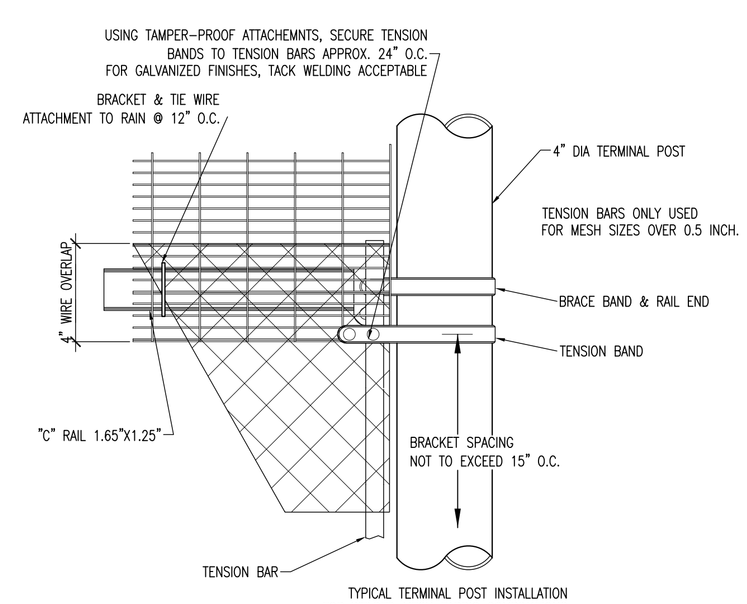

5 A2.1 WIRE MESH FENCE END CONNECTION DETAIL

NTS

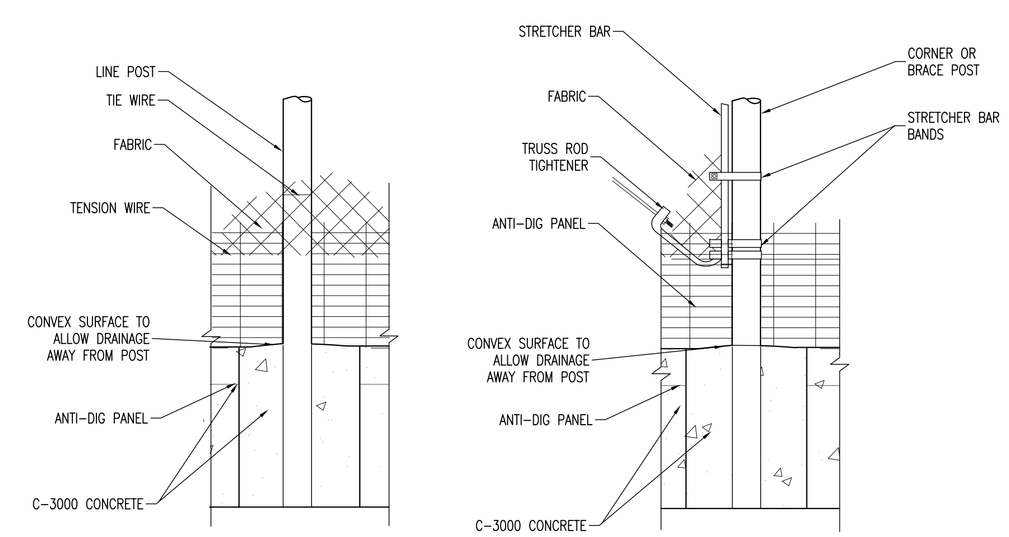

8 A2.1 BOTTOM DETAIL FOR MODIFED/COMBO FENCE

NTS

SCHLENKER & MCKITTRICK ARCHITECTS, P.C.
50 SOUTH LAST CHANCE GULCH
HELENA, MT 59601
PHONE: (406)442-4933
FAX: (406)442-4936
WEB: WWW.ARCHITECTS-SMA.COM

ARCHITECT SEAL:

STATE OF MONTANA — SCHLENKER & MCKITTRICK ARCHITECTS, P.C. — JOHN D. McKITTRICK #1008 — ROLAND SCHLENKER #1127 — HELENA, MONTANA — LICENSED ARCHITECTS

PROJECT:
MSH FORENSIC UNIT ADDITIONAL FENCING

PROJECT NUMBER:
0806

PROJECT LOCATION:
WARM SPRINGS, MT

PREPARED FOR:
MONTANA STATE HOSPITAL

LOGO:

CONSULTANT:

KEYMAP:

REVISIONS:

TEAM:
DRAWN BY: RP
CHECKED BY: JMD

TITLE:
FENCING

SHEET CONTENTS:
DETAILS

CADD FILE:
S:\0806\0806\Drawings\Elevations.dwg

PHASE:
CONSTRUCTION DOCUMENTS

DATE:
6/18/2008

PROJECT NUMBER:
0806

SHEET NO.:
A2.1

Plot Date: June 18, 2008

copyright 2007 SMA P.C.